©COPYRIGHT by MEIKO

Partial delivery 1 (LT 1)

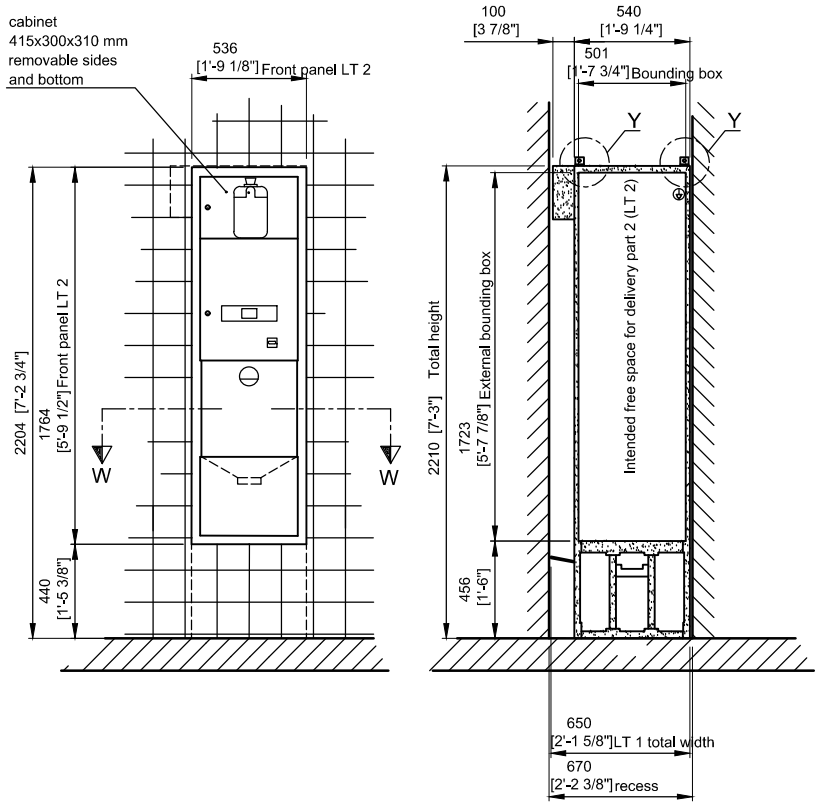

Partial delivery 2 (LT 2)

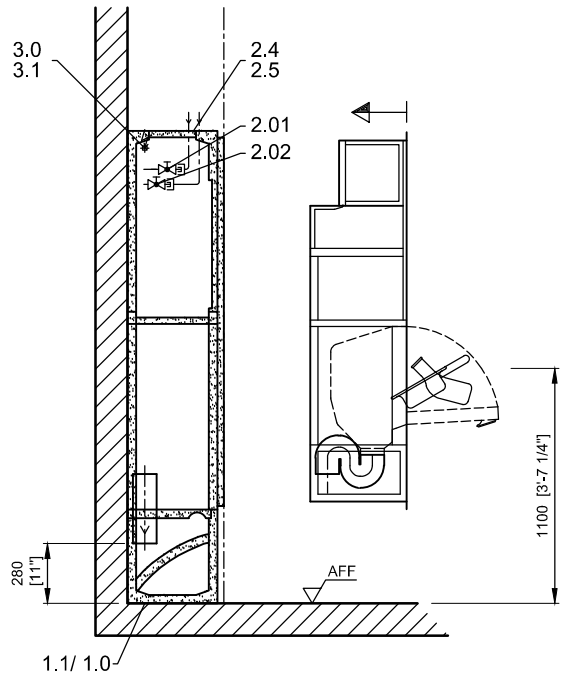

MEIKO TopLine	
1.0	Drain on the machine: PE siphon, ø 110 mm
1.1	On-site drain: DN 100
2.01	Hot water connection on the machine: G 3/4"a, dirt trap
2.4	On-site water connection: hot water, 45-65°C Supply pipe: DN 20, with stop valve Flow: 18 l/min, flow pressure: 100-500 kPa
2.02	Cold water connection on the machine: G 3/4"a, dirt trap
2.5	On-site water connection: cold water, 5-25°C Supply pipe: DN 20, with stop valve Flow: 18 l/min, flow pressure: 100-500 kPa
3.0	Electrical connection on unit: 3 Gnd ~ 208/230V, 60Hz, 3,9/4,6kW ⏚ Potential equalisation (M6 bolt) Protection class: Equipment Class 1, Pollution Degree 2, Installation Categary II. Main switch. Connectin cable approx. 2,5m
3.1	On-site electrical connection: Local fuse protection: 3 x 15A Protective measures and connection of the equipotential bonding must be carried out according to IEC 364-5-54 and conform to the local and national regulations. If the appliance is hard wired, a multiple-pole main switch must be installed. The main switch must be compliant with IEC 60947-1 and IEC 60947-3. Install the main switch in the vicinity of the appliance and in an area that is easily accessible. It must be clear that the main switch is linked to the appliance.
attachment "Important information" to be considered!	
Machine equipment	
DT-ND/V Decentralised thermal disinfection	

Detail Z

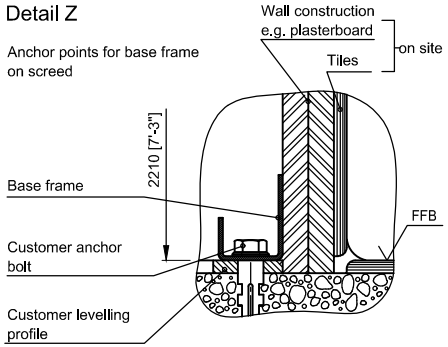

Section W-W

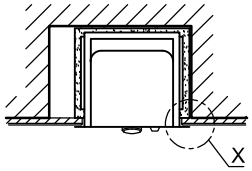

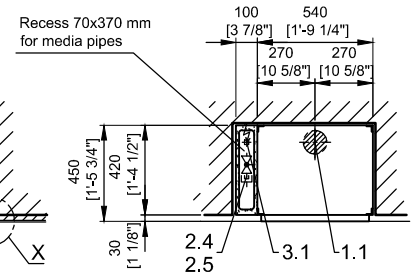

Detail Y

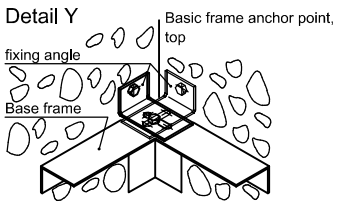

Detail X

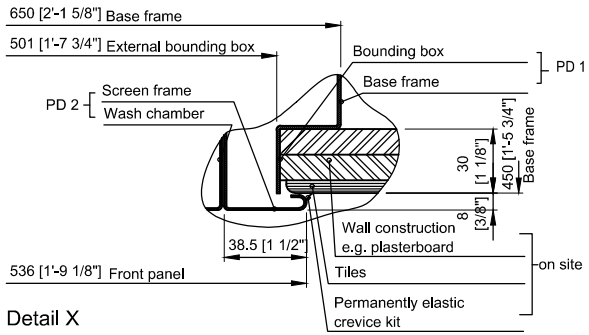

Mounting base frame on onsite screed (See detail Z).

Appliances intended to be installed in enclosed alcoves.

Observe protective measures when installing in a room with bathtub or shower

-	Original	01.08.2025	rgd

MEIKO USA, INC
1349 HEIL QUAKER BLVD, LA VERGNE, TN 37086
UNITED STATES OF AMERICA
TEL: (615) 399-6600 FAX: (615) 399-6620 WEB: www.meiko.us
© 2017 MEIKO USA, Inc. All rights reserved.

It is neither allowed to give this drawing without our permission to a third party for information or reproduction, nor may it be used for competition purposes.
We reserve all rights !

Reference:
-
-

Type:
MEIKO TOPLINE30
M2
DT-ND/V

Drawing-No.:	Project-No.:	Order-No. KG:	Order-No.:
P00052351 -	KD M2 USA		

Scale:	drawn:	checked:	Customer checked:	
1:25	01.08.25 rgd	og-mt		EN DEU A3

©COPYRIGHT by MEIKO